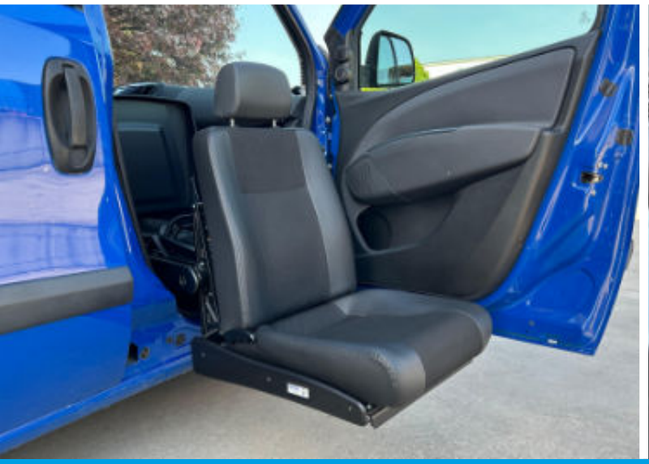

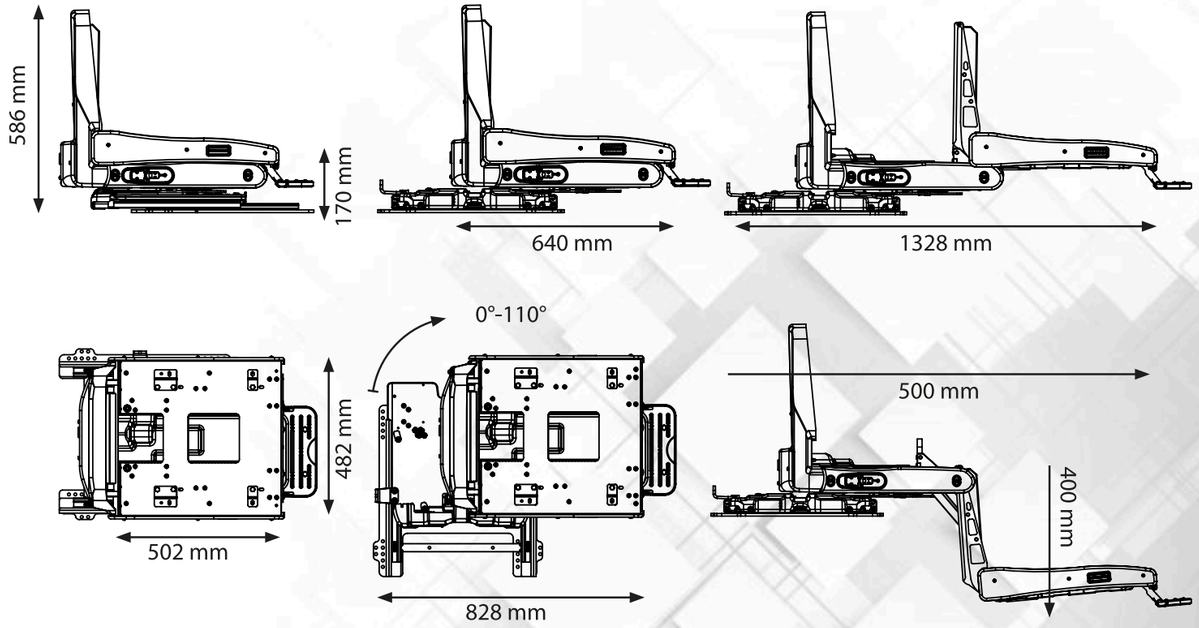

OUTGOING SWIVEL BASE - EC400

The outgoing swivel seat EC400 is an automatic system that facilitates access to the vehicle for people with reduced or impaired mobility and for elderly people.

It can be installed in the front or in the rear row, on the right or on the left side of the vehicle. Installation on the driver's side is compatible with many vehicles on the market. The device is built entirely in die-cast aluminum which offers maximum rigidity and strength with minimum weight. The extremely low weight makes it suitable for installation even on small vehicles.

The movements, the mechanisms, the motors have been positioned to create a very compact device. The thickness of the base under the seat is only 90 mm. Thanks to the remarkable stroke of the mechanisms: 270 mm internal movement, 110 ° rotation, 540 mm outgoing translation, 400 mm downward stroke, the device makes it suitable also for strong and tall people.

All handling adjustments are electronically programmable to offer the most comfortable position in the transport.

The device offers all the features of the C400 seat with the exception of the backrest adjustment. It is available in 3 different variants:
1. Manual internal translation and rotation; electric external translation and descent.
2. Manual internal translation; electric rotation, external transaltion and descent.
3. Programmable electric internal translation, rotation, external translation and descent.

New: a version with the THIRD PROGRAMMABLE AXIS is available, a function that allows to draw ideal curves for the exit and the return of the device on the DRIVE SIDE, reducing times and maneuvering spaces.
This function significantly increases the percentage of vehicles on which this device can be installed.